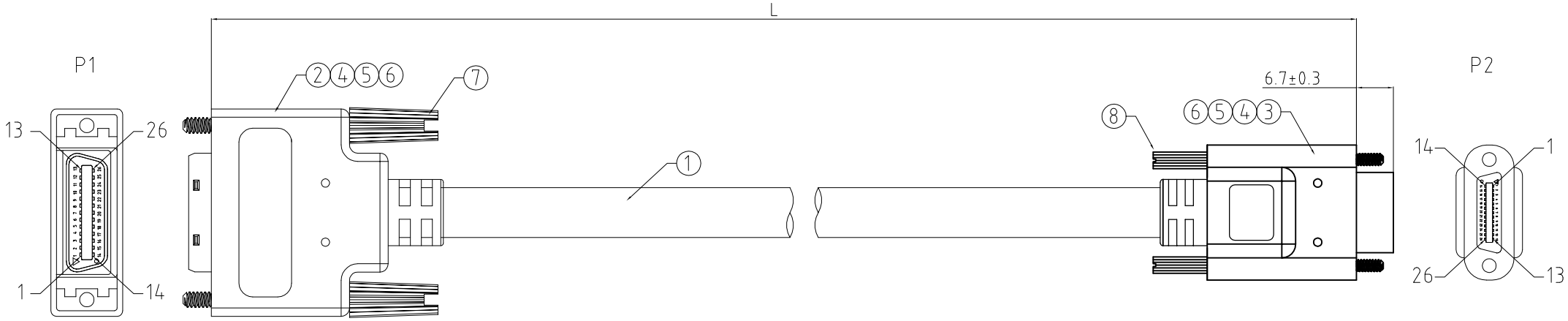

Length and Part number:

No.	Part No:	LENGTH(MM)
1	KC-942	2000±30
2	KC-944	3000±50
3	KC-946	5000±50

NOTES:
1. OPEN/SHORT/INTERMITTENCE:100% TEST
2. DIELECTRIC WITHSTAND:AC100V/1MIN.
3. INSULATION RESISTANCE:DC 100V/10MΩ (MIN)
4. CONDUCTIVE RESISTANCE:See TABLE A

Wire Assignment:

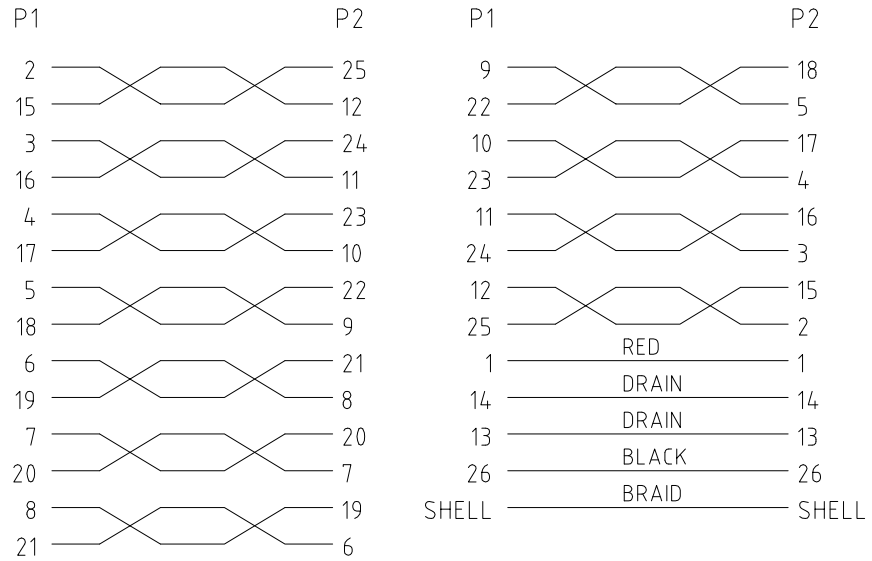

ITEM	MATERIAL	DESCRIPTION	Q'TY	UNIT
1	CABLE	UL 20276 (28AWG+AL)x11P+24AWG×2C+D×2C+AB OD:9.0MM Jacket:Black PVC	1	PCS
2	CONN	MDR 26P Male PIN:5U" Insulatin:Black Shell:NI	1	PCS
3	CONN	SDR 26P Male PIN:30U" Insulatin:Black Shell:NI	1	PCS
4	Inner Mold	LD-PE	N/A	KG
5	Over Mold	BLACK PVC	N/A	KG
6	Copper Foil	Copper Foil	N/A	MM
7	Screw	#4-40 Thumbscrew L=44MM	2	PCS
8	Screw	M2.0 Thumbscrew L=40.5MM	2	PCS

PRODUCT:	CAMERALINK CABLE- SDR-26-PIN MALE TO MDR-26-PIN MALE CABLE						
REV:	A	UNIT:	mm	DRW BY			
SCALE:	N:1	DATE:	01-05-2025	HARSHIL			

Toleance
x. ±0.60
.x ±0.40
.xx ±0.25

QUALITY SYMBOLS
□: CRITICAL
⊠: MAJOR
▽: ZERO DEFECT
▽: S.P.C

DARSH
APPROVER

SIDE

KYPTEC®

BALAJI MICROTECHNOLOGIES PVT. LTD. (BMT)
www.balaji-microtechnologies.com